RECOMMENDATIONS FOR ANTI-ROTATION ARM MOUNTING

The air cylinder portion of a Mach III through shaft style clutch or combination clutch-brake is designed to remain stationary. Due to friction in the bearing housed in the air cylinder, this member will rotate unless an anti-rotation arm (a.k.a. reaction arm) is installed. Threaded holes are provided in the cylinder for the installation of this arm. Below are illustrated examples of proper anti-rotation arm installation.

A. Clutches: Bolt Through Machine Frame

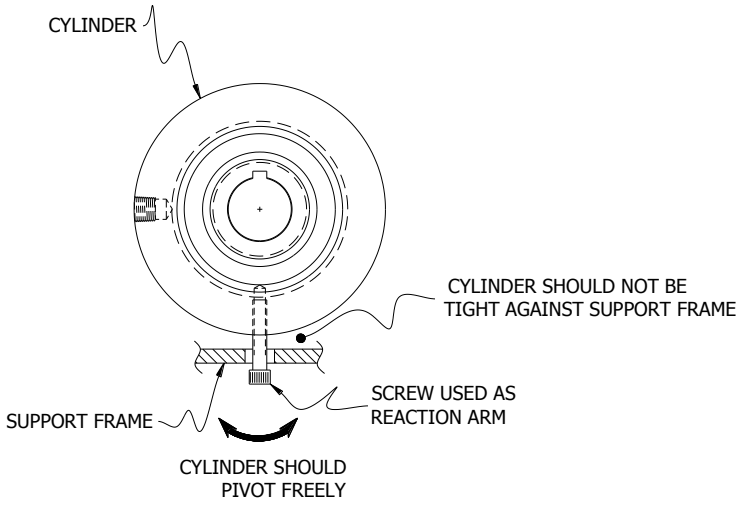

B. Clutches: Pipe Nipple Through Bracket Or Machine Frame

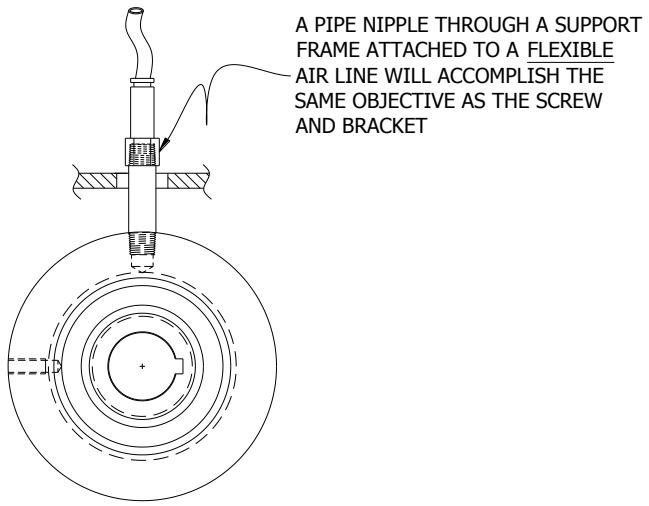

C. Clutches: Bolt Through Bracket Mounted To Machine Frame

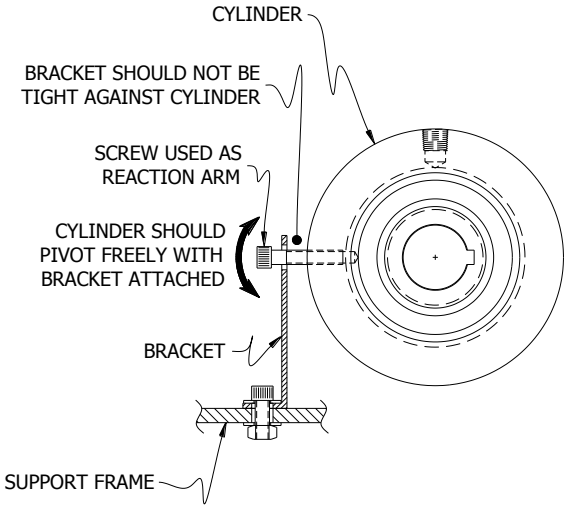

D. Combination Air Engaged Clutch, Spring Engaged Brake: One or Two Brackets Mounted To Machine Frame

In combination clutch-brake products, the anti-rotation arm performs the additional function of reacting torque of the brake portion of the assembly.

Only **ONE** bracket is necessary, **TWO** is optimal.

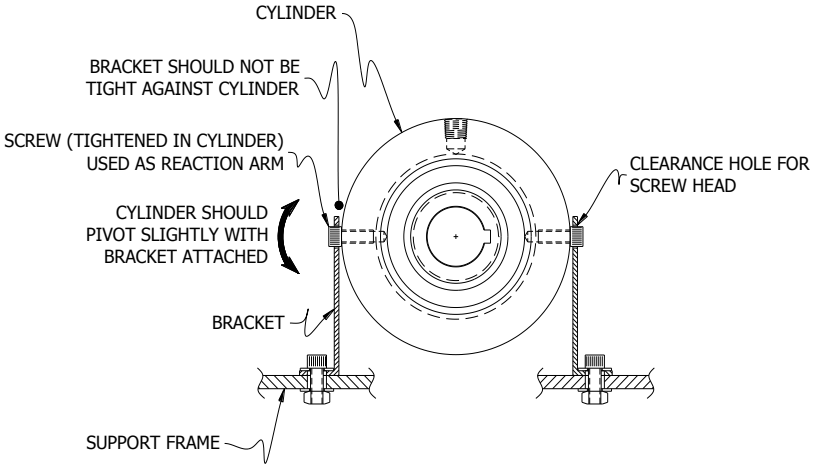

E. Combination Air Engaged Clutch, Air Engaged Brake: One or Two Brackets Mounted To Machine Frame

In combination clutch-brake products, the anti-rotation arm performs the additional function of reacting torque of the brake portion of the assembly.

Only **ONE** bracket is necessary, **TWO** is optimal.

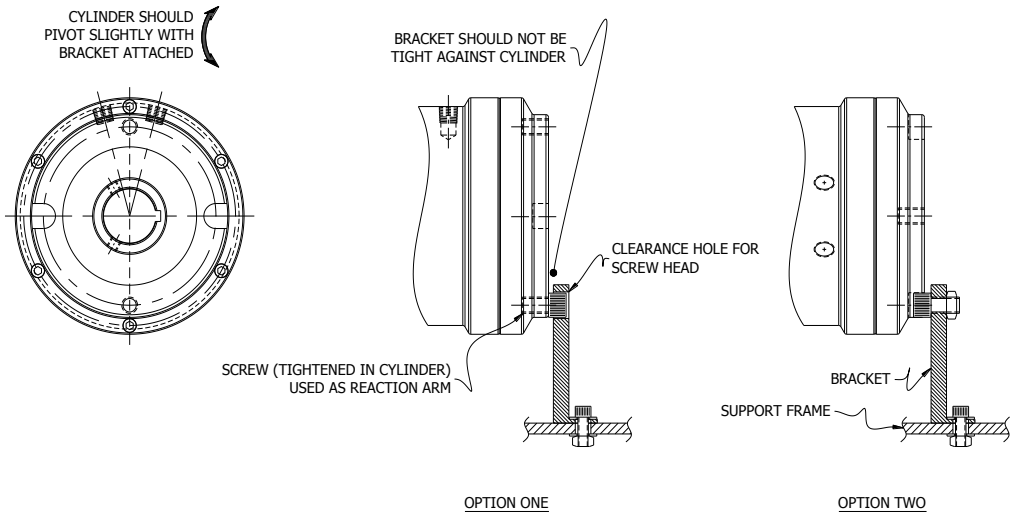

Mach III Technical Support
Toll Free: 866-291-0849
International: 001-859-291-0849
Email: engineering@machiii.com
www.machiii.com

These products include rotating equipment and should be guarded according to OSHA requirements, and other Federal, State and local regulations. It is the responsibility of the user to provide necessary guarding.